New Jersey Semi-Conductor Products, Inc.

20 STERN AVE.
SPRINGFIELD, NEW JERSEY 07081
U.S.A.

TELEPHONE: (973) 376-2922
(212) 227-6005
FAX: (973) 376-8960

BYV21 SERIES

SCHOTTKY-BARRIER RECTIFIER DIODES

High-efficiency schottky-barrier rectifier diodes in DO–4 metal envelopes, featuring low forward voltage drop, low capacitance, absence of stored charge and high temperature stability. They are intended for use in low output voltage switched-mode power supplies and high-frequency circuits in general, where both low conduction losses and zero switching losses are important. They can also withstand reverse voltage transients. The series consists of normal polarity (cathode to stud) types. A version with guaranteed reverse surge capability, BYV21-40A, is also available.

QUICK REFERENCE DATA

			BYV21–30	35	40(A)	45	
Repetitive peak reverse voltage	V_{RRM}	max.	30	35	40	45	V
Average forward current	$I_{F(AV)}$	max.	30				A
Forward voltage	V_F	<	0.55				V
Junction temperature	T_j	max.	150				°C

MECHANICAL DATA

Dimensions in mm

Fig.1 DO–4 with 10–32 UNF sutd (ϕ4.83 mm) as standard.
Metric M5 stud (ϕ5 mm) is available on request, e.g. BYV21–30M.

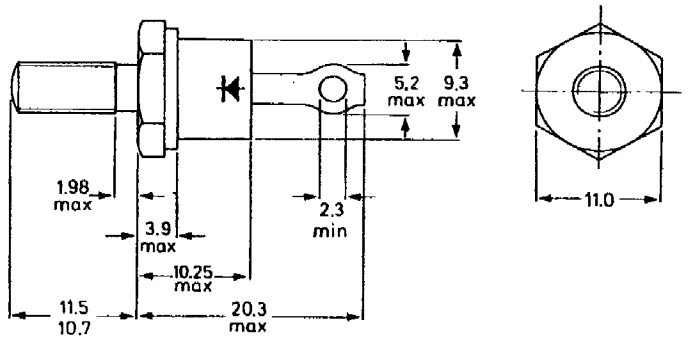

Net mass: 7 g

Diameter of clearance hole: 5.2 mm

Accessories supplied on request:
56295a (mica washer),
56295b (PTFE ring),
56295c (insulating bush).

Supplied with device: 1 nut, 1 lock washer.
Torque on nut:
min. 0.9 Nm (9 kg cm),
max. 1.7 Nm (17 kg cm).
Nut dimensions across the flats:
10–32 UNF, 9.5 mm; M5, 8.0 mm.

RATINGS

Limiting values in accordance with the Absolute Maximum System (IEC 134)

Voltages			BYV21-30	35	40(A)	45	
Non-repetitive peak reverse voltage	V_{RSM}	max.	36	42	48	54	V
Repetitive peak reverse voltage (note 1)	V_{RRM}	max.	30	35	40	45	V
Crest working reverse voltage	V_{RWM}	max.	30	35	40	45	V
Continuous reverse voltage	V_R	max.	30	35	40	45	V

Currents				
Average forward current; switching losses negligible square wave; $\delta = 0.5$; up to $T_{mb} = 124$ °C (note 2)	$I_{F(AV)}$	max.	30	A
sinusoidal; up to $T_{mb} = 125$ °C (note 2)	$I_{F(AV)}$	max.	27	A
R.M.S. forward current	$I_{F(RMS)}$	max.	42.5	A
Repetitive peak forward current $t_p = 20\ \mu s$; $\delta = 0.02$	I_{FRM}	max.	500	A
Non-repetitive peak forward current half sine-wave; $T_j = 125$ °C prior to surge; with reapplied $V_{RWM\ max}$; t = 10 ms	I_{FSM}	max.	600	A
t = 8.3 ms	I_{FSM}	max.	650	A
I^2t for fusing (t = 10 ms)	I^2t	max.	1800	A^2s
Reverse surge current (BYV21-40A only) $t_p = 100\ \mu s$	I_{RSM}	max.	1.0	A
Temperatures				
Storage temperature	T_{stg}		−55 to +150	°C
Junction temperature	T_j	max.	150	°C

MOUNTING INSTRUCTIONS

The top connector should be neither bent nor twisted; it should be soldered into the circuit so that there is no strain on it.
During soldering, the heat conduction to the junction should be kept to a minimum.

THERMAL RESISTANCE

From junction to mounting base	$R_{th\ j\text{-}mb}$	=	1	K/W
From mounting base to heatsink with heatsink compound	$R_{th\ mb\text{-}h}$	=	0.3	K/W
without heatsink compound	$R_{th\ mb\text{-}h}$	=	0.5	K/W
Transient thermal impedance; t = 1 ms	$Z_{th\ j\text{-}mb}$	=	0.15	K/W

CHARACTERISTICS

Forward voltage $I_F = 30$ A; $T_j = 100$ °C	V_F	<	0.55	V*
$I_F = 80$ A; $T_j = 25$ °C	V_F	<	0.88	V*
Rate of rise of reverse voltage $V_R = V_{RWMmax}$	$\frac{dV_R}{dt}$	<	1500	V/μs
Reverse current $V_R = V_{RWMmax}$; $T_j = 125$ °C	I_R	<	150	mA
Capacitance at f = 1 MHz $V_R = 5$ V; $T_j = 25$ to 125 °C	C_d	typ.	1150	pF